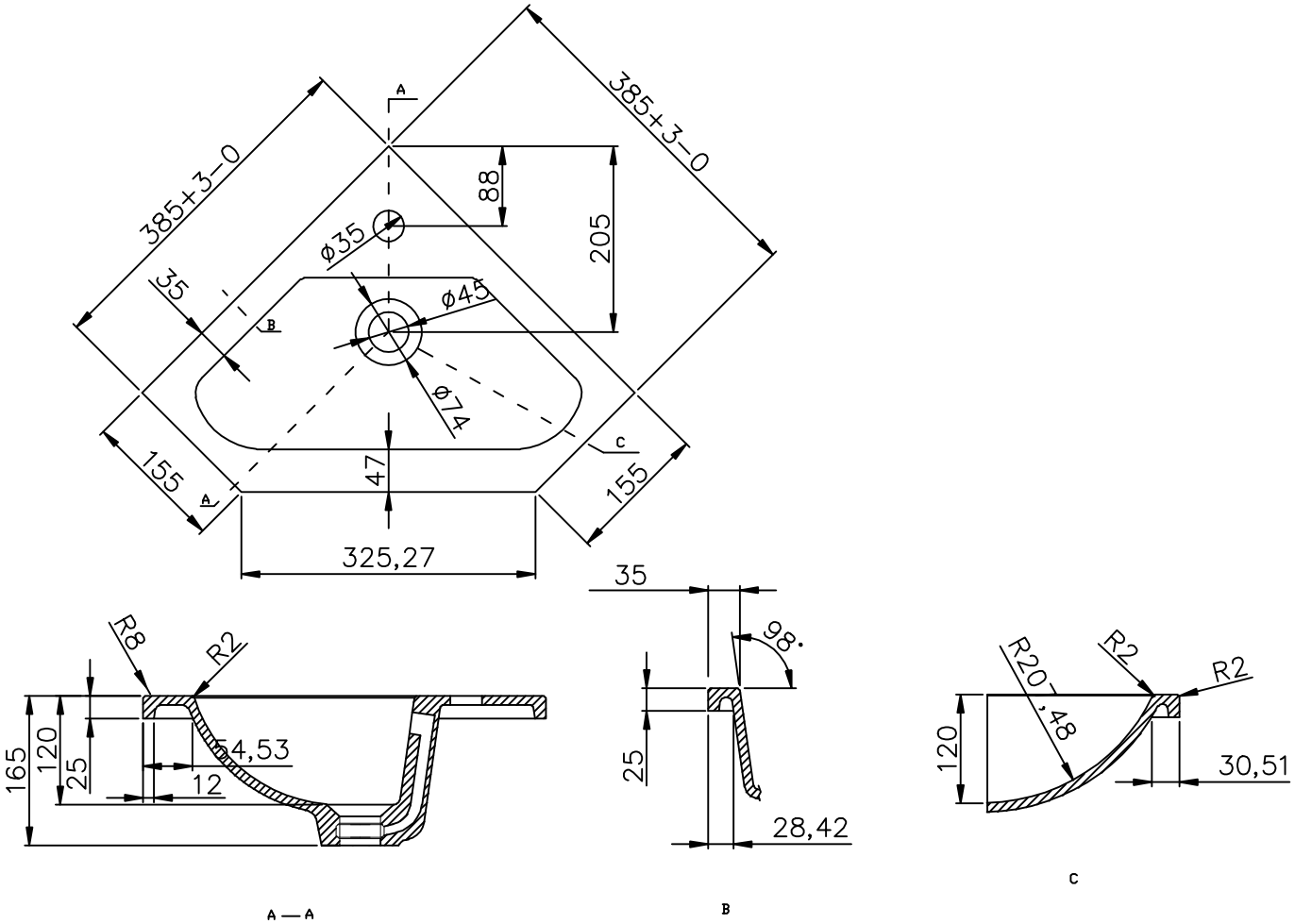

Z385	TITLE		
	DRAWING_NUMBER	EDITION	SHEET