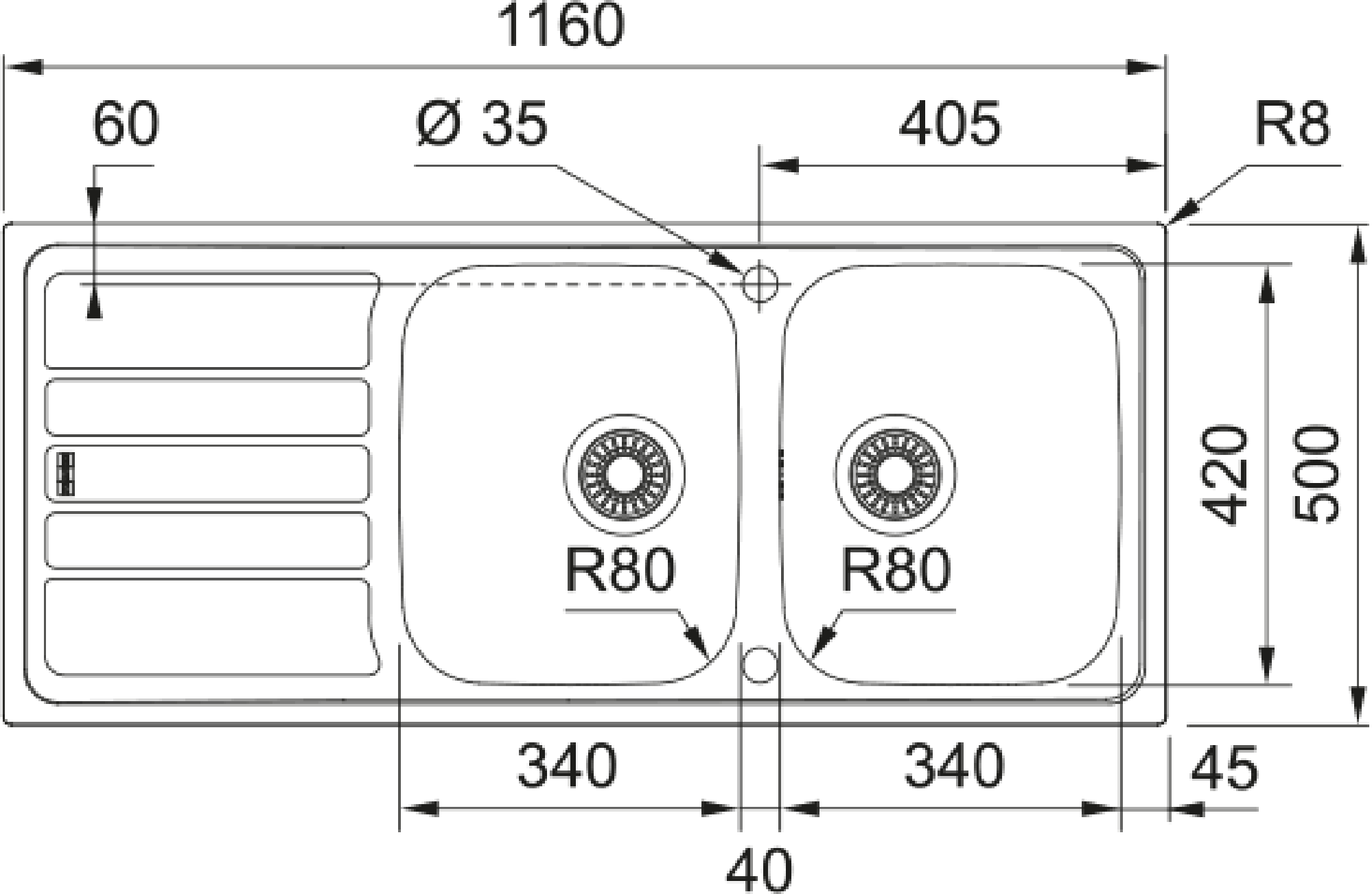
1160
60
Ø 35
405
R8
420
500
R80
R80
340
340
45
40