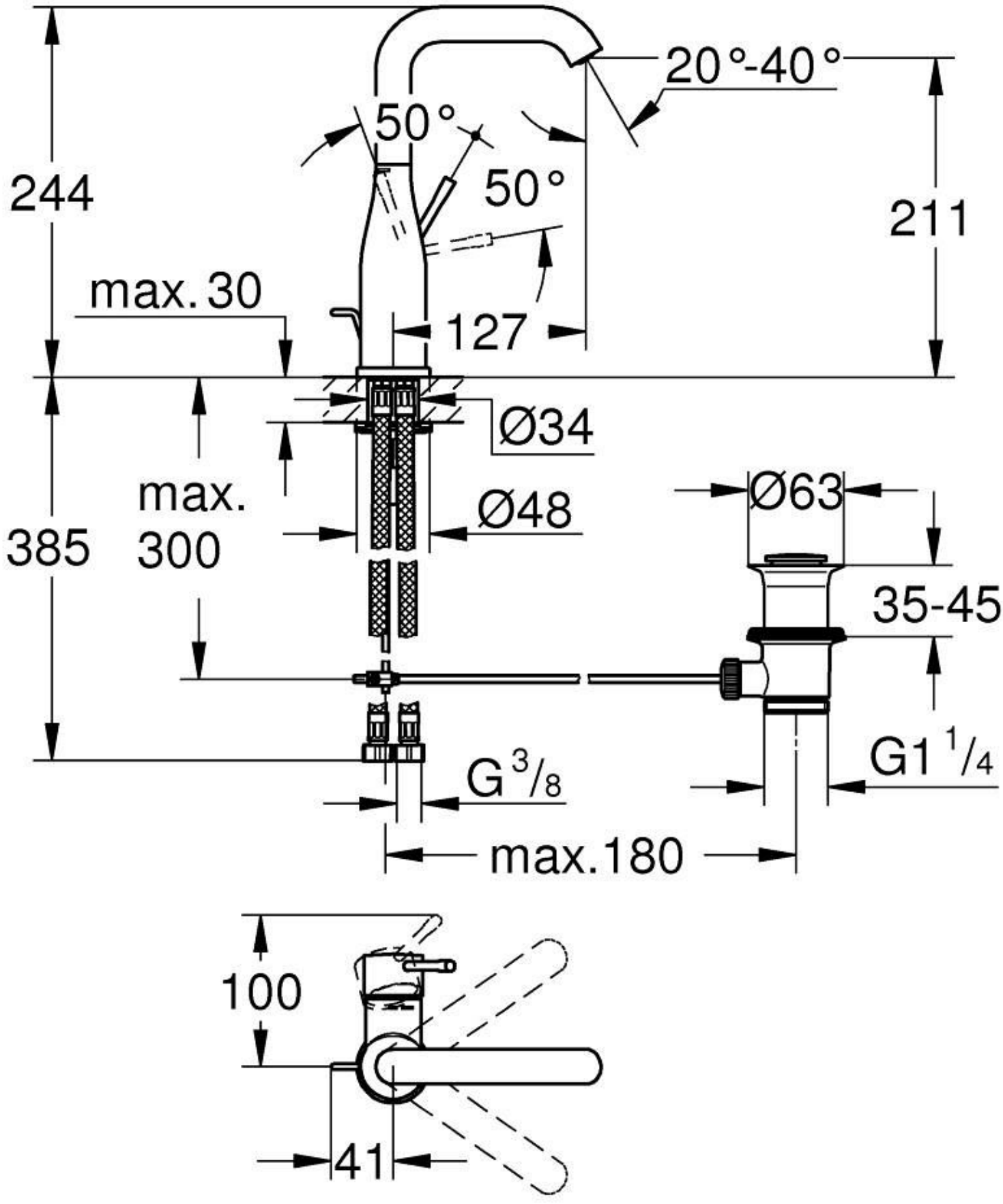
20°-40°
50°
50°
244
211
max. 30
127
Ø34
max.
300
Ø48
Ø63
385
35-45
G 3/8
G1 1/4
max.180
100
41