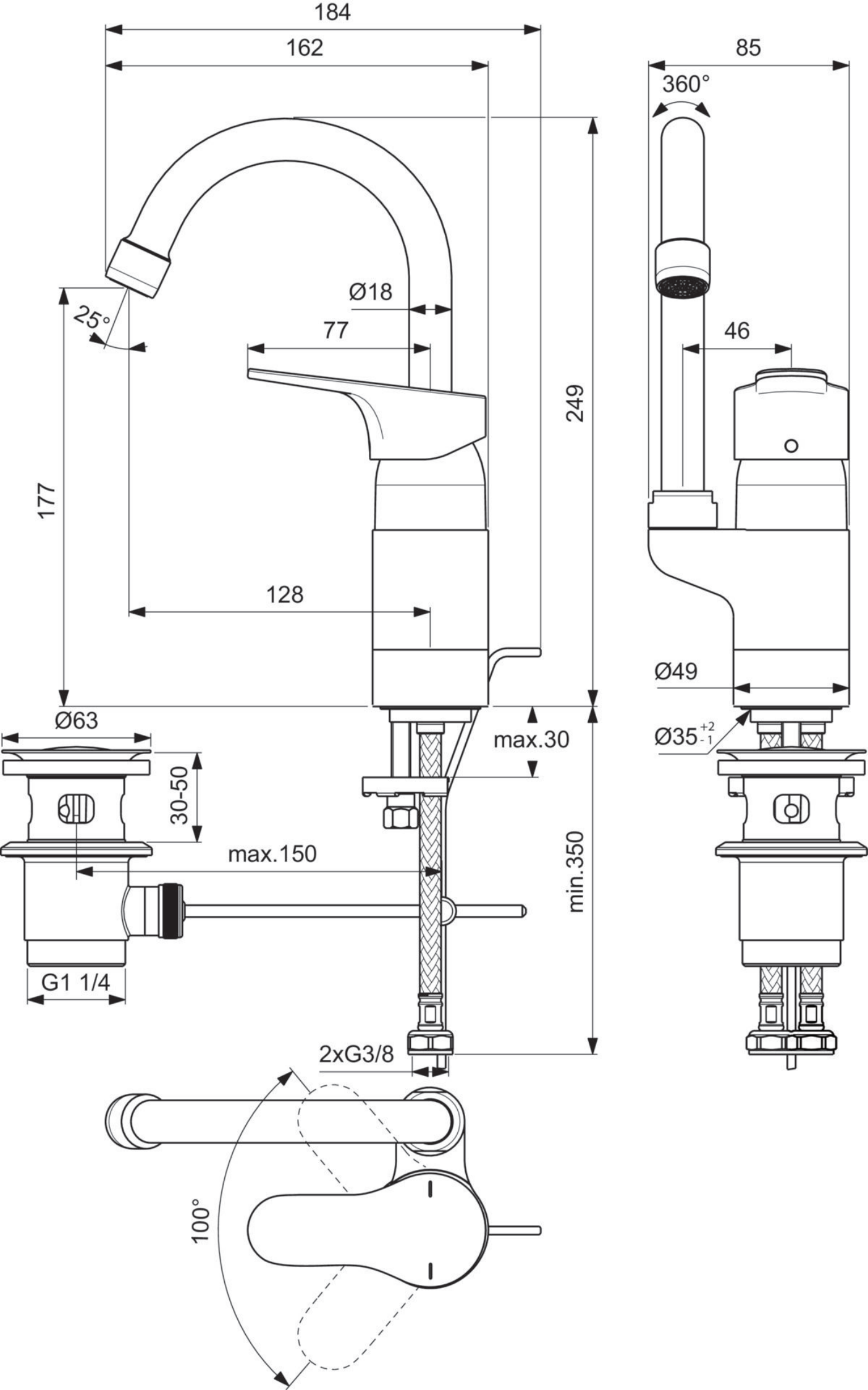
184
162
85
360°
Ø18
77
46
25°
249
177
128
Ø49
Ø63
max.30
Ø35 +2 -1
30-50
max.150
min.350
G1 1/4
2xG3/8
100°